Husqvarna

IPL, 9027 STE, 2007-01, 501 01 42-04

9027STE

ДЕТАЛИРОВКА

SNOW THROWER - MODEL NO. EU9027STE **(96191000304), PRODUCT NO. 961 91 00-03**

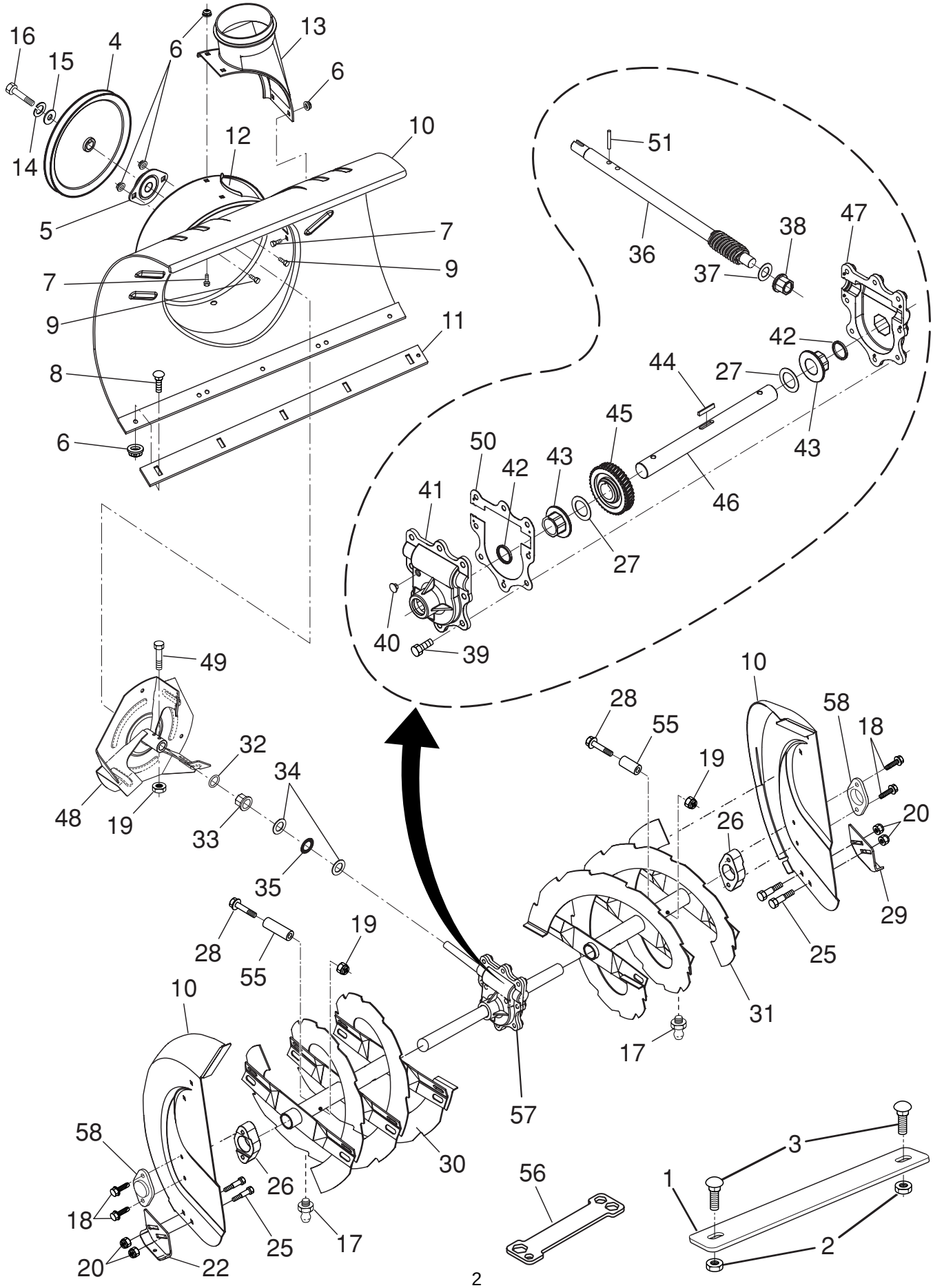

SNOW THROWER - MODEL NO. EU9027STE **(96191000304), PRODUCT NO. 961 91 00-03**

KEY NO.	PART NO.	DESCRIPTION
1	532 18 87-03	Bar, Weight
2	532 75 11-53	Nut, Hex Flange 5/16-18
3	872 11 05-10	Bolt, Carriage 5/16-18 x 1/2
4	532 19 10-79	Pulley, Impeller
5	532 18 89-09	Bearing Assembly, Flange
6	532 19 85-41	Nut, Hex Flange 5/16-18
7	532 18 03-55	Bolt, Flat Head, Carriage 5/16-18 x 5/8
8	872 27 05-05	Bolt, Carriage 5/16-1 8 x 5/8
9	532 19 98-79	Bolt
10	532 40 77-39	Housing, Auger
11	532 40 77-27	Bar, Scraper
12	532 18 40-95	Bracket, Corner Discharge
13	532 17 53-22	Base, Discharge Chute
14	819 11 15-07	Washer, Flat
15	532 19 85-52	Washer, Lock 5/16
16	874 95 05-12	Screw, Hex Head 5/16-18 x 3/4
17	532 40 56-37	Grease Fitting
18	532 17 95-82	Screw, Hex Head 5/16 x 1
19	873 80 04-00	Nut, Hex Lock 1/4-20
20	532 19 85-41	Nut, Hex Lock 5/16-18
22	532 18 40-94	Skid Plate, RH
25	872 27 05-06	Bolt, Shoulder 1/4-20
26	532 18 79-25	Bearing, Auger
27	532 17 46-97	Washer, Thrust, 1"
28	532 19 86-36	Screw #25-20 x 1-3/4
29	532 18 40-93	Skid Plate, LH
30	**532 40 78-96**	Auger Assembly, RH
31	**532 40 78-95**	Auger Assembly, LH
32	532 17 46-99	O-Ring
33	532 17 47-00	Bushing, Flange 3/4
34	532 17 46-81	Washer, Thrust 3/4
35	532 17 46-84	Bearing, Thrust 3/4
36	532 17 46-60	Shaft, Impeller
37	532 17 46-83	Washer, Thrust 5/8
38	532 17 46-86	Bushing, Flange 5/8
39	532 15 00-78	Screw, Hex Head 5/16-18 x 3/4
40	532 08 64-47	Plug, Case
41	532 17 46-88	Housing, Gearbox, RH
42	532 17 46-98	Seal, Oil
43	532 17 47-01	Bushing, Flange, 1"
44	532 18 92-82	Key, Square 1/4 x 1/4 x 7/8
45	532 17 46-59	Gear, Worm
46	532 17 46-57	Shaft, Auger
47	532 17 46-87	Housing, Gearbox, LH
48	532 18 41-05	Impeller Assembly
49	874 78 04-26	Screw, Hex Head 1/4-20 x 1-5/8
50	532 17 53-11	Gasket, Gearbox
51	532 18 42-05	Pin, Roll 3/16 x 1-1/8
55	532 19 86-38	Spacer
56	532 18 06-84	Multi-Wrench
57	532 17 88-78	Gearbox Assembly
58	532 18 81-70	Bearing Retainer, Plastic

NOTE: All component dimensions given in U.S. inches. 1 inch = 25.4 mm

IMPORTANT: Use only Original Equipment Manufacturer (O.E.M.) replacement parts. Failure to do so could be hazardous, damage your snow thrower and void your warranty.

SNOW THROWER - MODEL NO. EU9027STE **(96191000304), PRODUCT NO. 961 91 00-03**

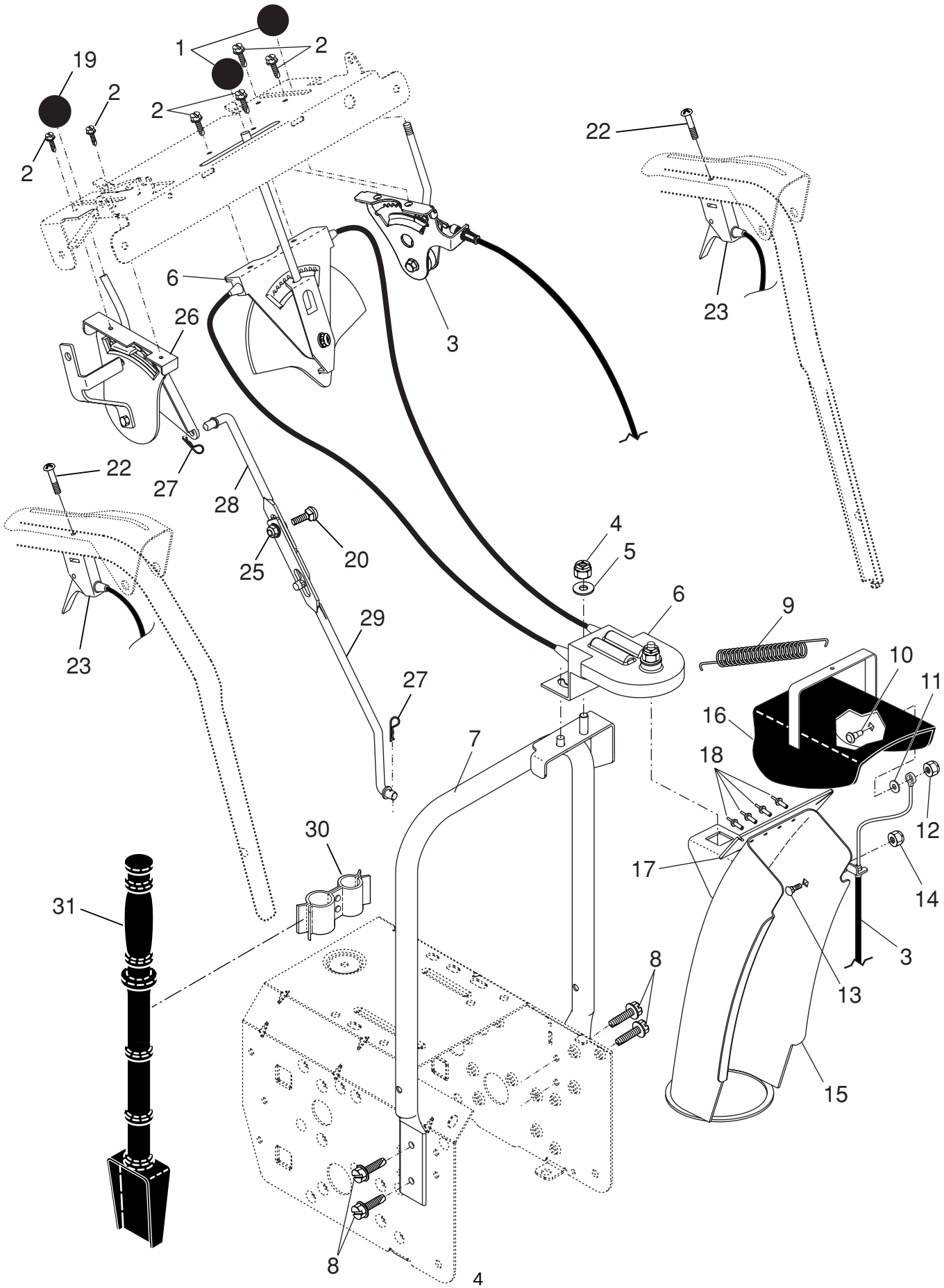

KEY NO.	PART NO.	DESCRIPTION
1	532 18 33-34	Knob, Lever
2	817 50 10-10	Screw #10-24 x 5/8
3	532 19 84-75	Control Assembly, Deflector
4	873 80 06-00	Nut, Lock 3/8-16
5	819 13 13-16	Washer, Flat 3/8
6	532 40 49-74	Control Assembly, Chute Rotater
7	532 40 76-43	Support, Pivot
8	532 15 00-78	Screw, Hex Head 5/16-18 x 3/4
9	532 18 45-05	Spring, Deflector
10	532 17 98-29	Bolt, Shoulder
11	532 17 92-46	Washer, Friction, Nylon
12	532 19 17-30	Nut, Lock 1/4-20
13	872 25 05-05	Bolt, Carriage 5/16-18
14	532 75 11-53	Nut, Lock 5/16-18
15	532 40 76-50	Chute Assembly
16	532 18 41-13	Deflector Assembly
17	532 17 91-45	Seal, Deflector
18	532 12 84-15	Rivet, Blind
19	532 18 33-33	Knob, Speed Control Lever
20	872 27 05-06	Bolt, Carriage 5/16-18 x 3/4
22	874 04 10-24	Screw #10-24 x 1-1/2
23	532 19 24-49	Control Assembly, Power Steering
25	532 19 85-41	Nut, Lock 5/16-18
26	532 19 84-74	Lever Assembly, Speed Control
27	532 16 96-75	Retainer, Hairpin
28	532 18 04-45	Rod, Upper, Speed Control
29	532 18 77-16	Rod, Lower, Speed Control
30	532 19 27-10	Clamp, Clean-Out Tool
31	532 19 21-99	Tool, Clean-Out

NOTE: All component dimensions given in U.S. inches. 1 inch = 25.4 mm
IMPORTANT: Use only Original Equipment Manufacturer (O.E.M.) replacement parts.
Failure to do so could be hazardous, damage your snow thrower and void your warranty.

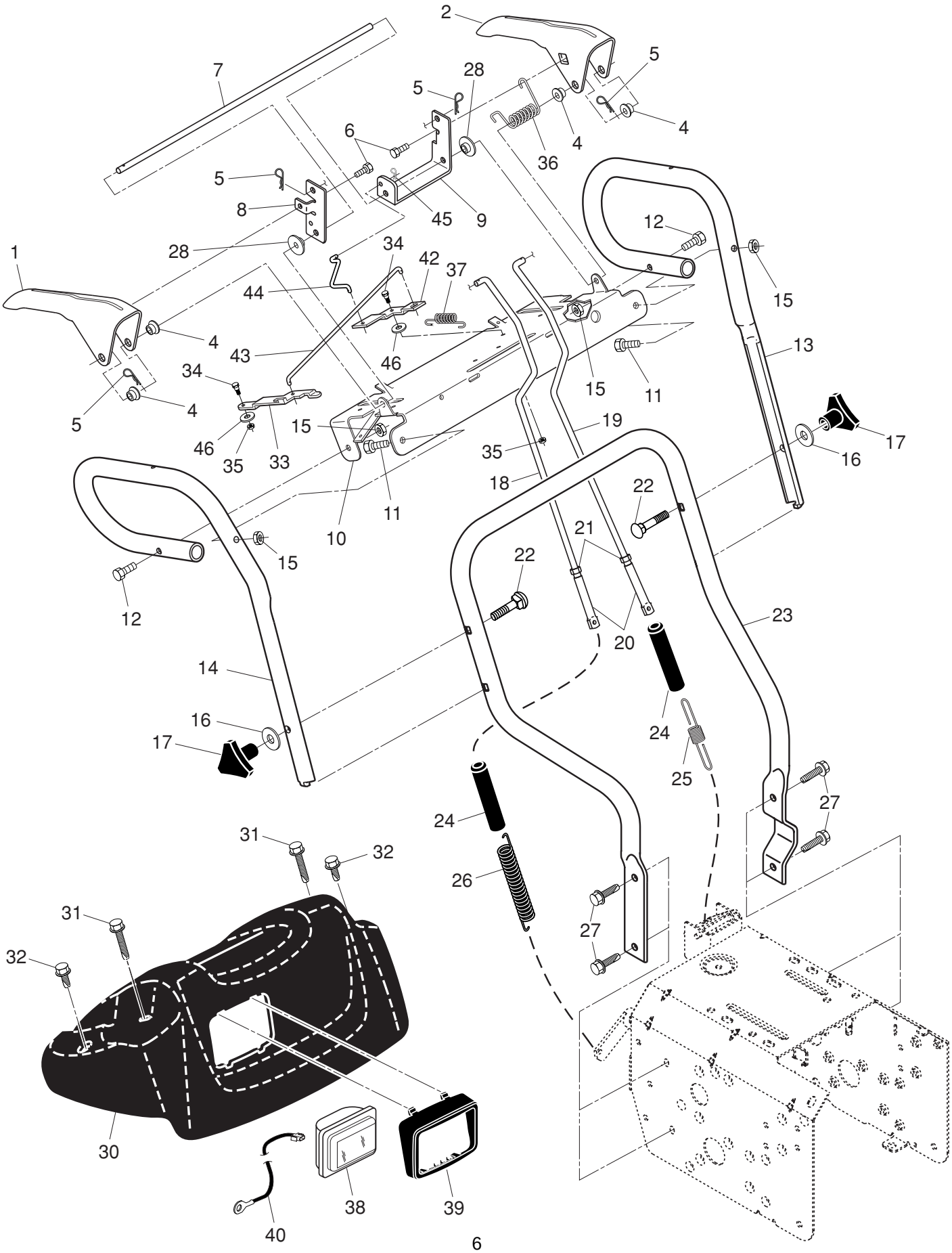
1
2
4
5
6
7
8
9
10
11
12
13
14
15
16
17
18
19
20
21
22
23
24
25
26
27
28
30
31
32
33
34
35
36
37
38
39
40
42
43
44
45
46

KEY NO.	PART NO.	DESCRIPTION
1	532 40 76-49	Lever, Auger Control, RH
2	532 40 76-48	Lever, Traction Drive Control, LH
4	532 17 88-88	Bushing, Flange
5	532 16 96-75	Retainer, Hairpin
6	817 06 04-08	Screw, Hex Head
7	532 17 86-52	Rod, Interlock
8	532 19 95-76	Arm, Impeller Rod
9	532 19 95-75	Arm, Traction Rod
10	532 19 95-31	Panel, Control
11	874 78 05-24	Screw, Hex Head 5/16-18 x 1-1/2
12	874 78 05-28	Screw, Hex Head 5/16-18 x 1-3/4
13	532 18 41-07	Handle Tube, LH
14	532 18 41-08	Handle Tube, RH
15	532 75 11-53	Nut, Lock 5/16-18
16	819 13 13-16	Washer, Flat 3/8
17	532 17 88-99	Knob, Handle
18	532 18 04-80	Rod, Auger Control
19	532 18 04-81	Rod, Traction Control
20	532 18 04-28	End, Control Rod
21	873 35 05-00	Nut, Hex, Jam 5/16-18
22	872 12 06-18	Bolt, Carriage 3/8-16 x 2-1/4
23	532 18 40-87	Handle Tube, Lower
24	532 18 04-47	Sleeve, Spring
25	532 18 09-26	Spring, Traction Drive
26	532 17 86-69	Spring, Auger Control
27	817 00 06-16	Screw, Hex Head 3/8-16 x 1
28	532 19 85-59	Bushing, Pivot Lever
30	532 18 29-06	Console, Panel
31	532 17 52-62	Screw, Hex Head, Tapping #10-24 x 1-1/4
32	532 18 44-71	Screw, Hex Head, Tapping #10-24 x 1/2
33	532 19 95-77	Latch, Interlock
34	532 18 35-18	Bolt, Shoulder
35	532 06 80-38	Nut, Lock 1/4-20
36	532 17 88-31	Spring, Torsion
37	532 19 38-85	Spring, Interlock
38	532 17 86-66	Headlight, Halogen (Includes Bulb)
- -	532 40 16-20	Bulb, Halogen
39	532 17 86-68	Bezel, Headlight
40	532 18 09-64	Harness, Headlight (Halogen)
42	532 19 95-78	Lever, Interlock
43	532 19 96-38	Rod, Latch, Interlock
44	532 19 63-38	Rod, Arm, Interlock
45	532 70 02-79	Clip
46	532 17 92-46	Washer, Friction

NOTE: All component dimensions given in U.S. inches. 1 inch = 25.4 mm
IMPORTANT: Use only Original Equipment Manufacturer (O.E.M.) replacement parts. Failure to do so could be hazardous, damage your snow thrower and void your warranty.

SNOW THROWER - MODEL NO. EU9027STE **(96191000304), PRODUCT NO. 961 91 00-03**

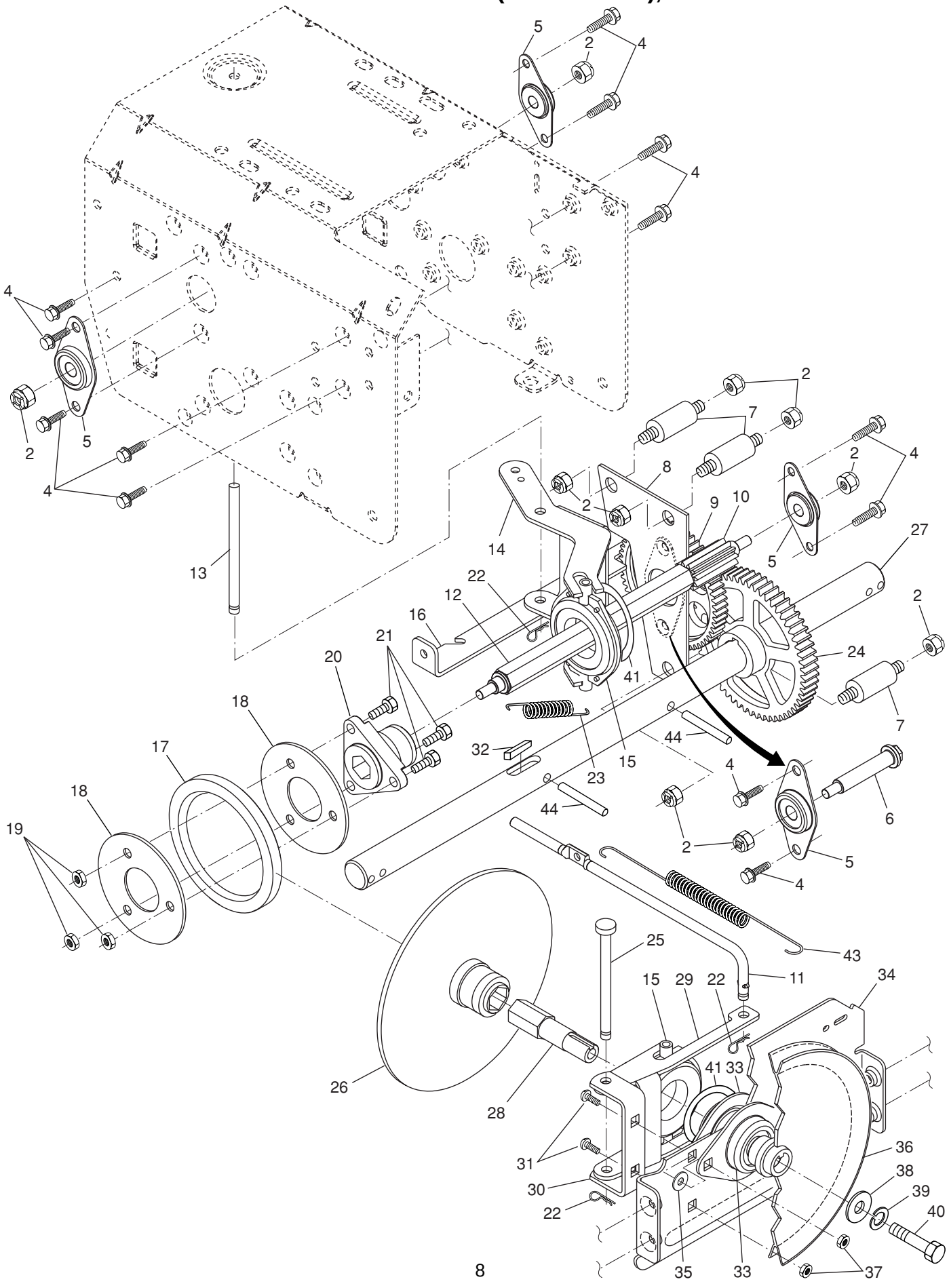

KEY NO.	PART NO.	DESCRIPTION
2	532 75 11-53	Nut, Lock 5/16-18
4	532 19 85-84	Screw, Hex Head 5/16-18 x 1/2
5	532 18 00-17	Bearing, Flange
6	532 18 01-34	Shaft, Auxiliary
7	532 17 92-70	Spacer, Plate
8	532 19 29-07	Plate, Auxiliary
9	532 18 00-82	Gear, Intermediate (12/58)
10	532 18 00-65	Gear, Pinion
11	532 18 77-14	Rod, Clutch
12	532 18 00-66	Shaft, Long, Hex
13	532 17 88-07	Pin, Pivot
14	532 18 40-80	Lever, Shifter / Wheel
15	532 17 53-44	Trunnion Bearing Assembly
16	532 18 78-57	Bracket, Pivot, Shift
17	532 17 98-31	Ring, Rubber Wheel
18	532 19 95-09	Plate, Rubber Wheel
19	873 93 05-00	Nut, Lock 5/16-18
20	532 17 86-13	Hub, Rubber Wheel
21	874 76 05-14	Screw, Hex Head 5/16-18 x 7/8
22	532 08 51-79	Retainer, Hairpin
23	532 18 01-35	Spring, Bias
24	532 18 00-81	Gear, Axle (58 Teeth)
25	532 17 86-95	Pin, Pivot Lever
26	532 19 77-63	Plate Assembly, Drive
27	532 40 43-07	Shaft, Axle
28	532 19 77-64	Shaft, Short Hex
29	532 18 40-77	Lever, Shifter Plate
30	532 18 40-76	Bracket, Shifter Support
31	872 27 05-05	Bolt, Carriage 5/16-18 x 5/8
32	532 18 92-82	Key, Square 1/4 x 1/4 x 7/8
33	532 18 89-09	Bearing, Flange
34	532 18 40-75	Plate, Drive Mounting
35	532 18 25-04	Spacer, Bearing
36	532 19 10-80	Pulley, Traction Drive
37	532 19 85-41	Nut, Lock 5/16-18
38	819 11 15-07	Washer, Flat
39	532 19 88-52	Washer, Lock 5/16
40	874 95 05-12	Screw, Hex Head 5/16-18 x 3/4
41	812 00 00-12	Ring, Retaining
43	532 17 90-95	Spring, Return
44	532 18 42-06	Pin, Roll

NOTE: All component dimensions given in U.S. inches. 1 inch = 25.4 mm
IMPORTANT: Use only Original Equipment Manufacturer (O.E.M.) replacement parts.
Failure to do so could be hazardous, damage your snow thrower and void your warranty.

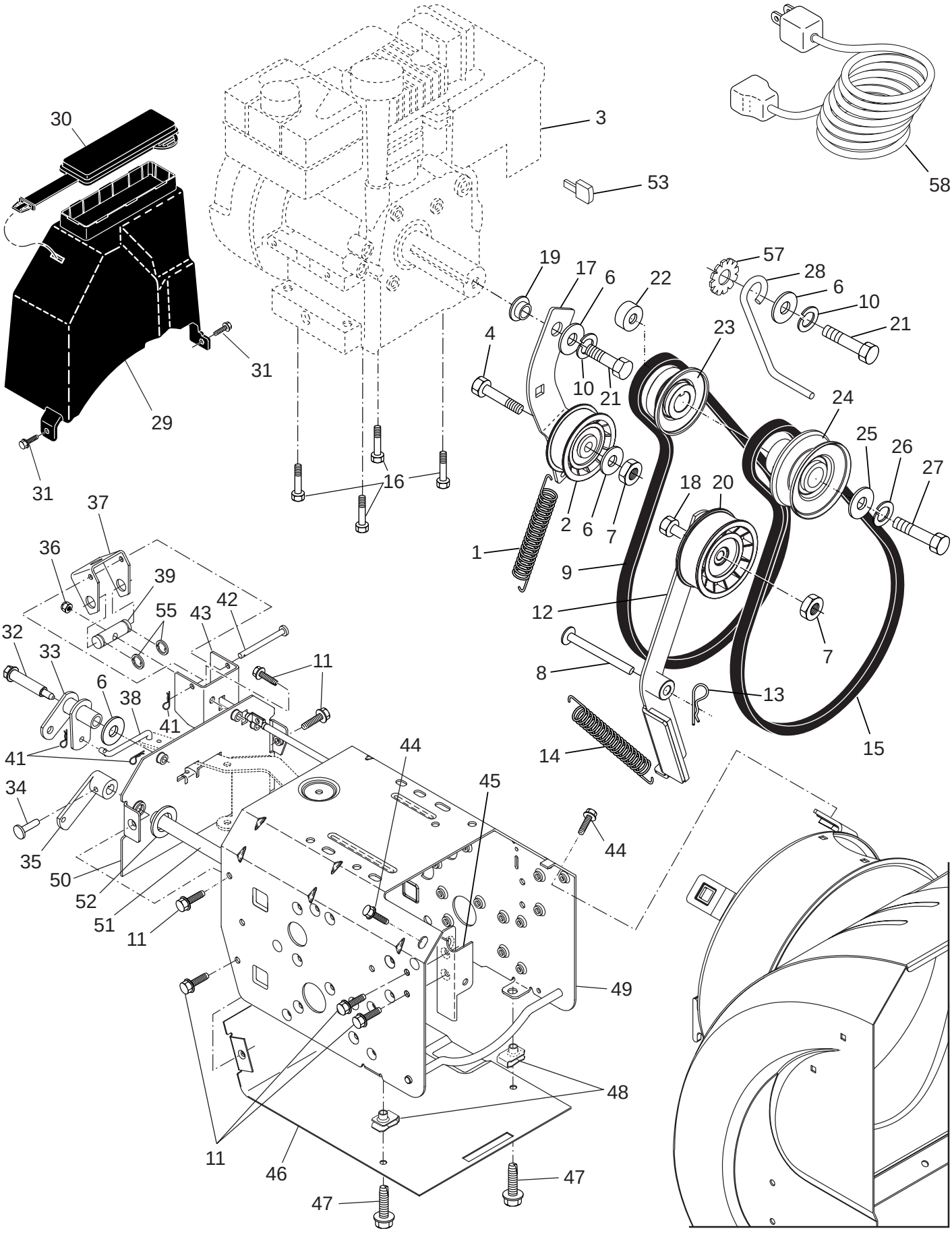
30
3
58
53
31
29
31
16
19
17
6
22
4
10
21
57
28
6
10
21
23
24
25
26
27
18
20
2
6
7
1
9
12
7
8
13
14
15
37
36
39
55
43
42
32
33
11
6
38
41
41
44
45
34
44
35
50
52
51
11
49
48
11
46
47
47

KEY NO.	PART NO.	DESCRIPTION
1	532 18 10-44	Spring, Traction Idler
2	532 18 05-22	Pulley, Idler (2-1/4)
3	- - -	Engine, Tecumseh, Model Number OH318SA (order parts from engine manufacturer)
4	874 78 05-20	Screw, Hex Head 5/16-18 x 1-1/4
6	532 05 92-89	Washer, Flat
7	532 16 67-85	Nut, Jam, Lock 5/16-18
8	532 17 53-30	Pin, Idler Pivot
9	532 17 90-92	V-Belt, Traction Drive
10	532 19 85-52	Washer, Lock 5/16
11	532 19 85-84	Screw, Hex Head 5/16-18 x 1/2
12	532 17 92-59	Impeller Arm / Pad Assembly
13	532 08 51-79	Retainer, Hairpin
14	532 17 88-28	Spring, Brake
15	532 40 80-10	V-Belt, Impeller Drive
16	532 15 04-06	Screw, Hex Head 3/8-16 x 1-1/4
17	532 18 48-04	Arm, Idler
18	874 78 05-24	Screw, Hex Head 5/16-18 x 1-1/2
19	532 19 85-59	Bushing, Idler Pivot
20	532 18 05-23	Pulley, Idler (2-3/4)
21	874 61 05-16	Screw, Hex Head 5/16-18 x 1
22	532 17 93-71	Spacer, Engine Pulley
23	532 18 04-78	Pulley, Engine, Traction Drive
24	532 17 91-57	Pulley, Engine, Impeller Drive
25	532 40 00-26	Washer, Flat 3/8
26	532 85 02-63	Washer, Lock, Helical 3/8
27	532 85 10-84	Screw, Hex Head 3/8-24 x 1-3/8
28	532 15 54-52	Guide, Belt
29	532 19 22-13	Belt Cover Assembly (Includes Toolbox Cover)
30	532 17 88-30	Cover, Toolbox
31	532 40 05-24	Screw, Hex Head 1/4-20 x 1/2
32	532 17 92-56	Bolt, Shoulder 5/16-18
33	532 18 78-53	Bellcrank Shifter
34	532 19 85-80	Clevis Pin
35	532 40 54-85	Arm, Auger Control
36	873 80 05-00	Nut, Lock 5/16-18
37	532 18 40-86	Bellcrank
38	532 18 71-01	Link, Speed Control
39	532 19 21-10	Trunnion, Pivot Bracket
41	532 70 02-79	Hairpin, Cotter 3/32 x 1/2
42	532 17 90-65	Pin, Bellcrank
43	532 18 40-85	Bracket, Bellcrank
44	817 00 06-16	Screw, Hex Head
45	532 18 40-74	Pivot Bracket, Impeller Idler Arm
46	532 18 40-84	Pan, Frame Bottom
47	871 02 05-12	Screw, Hex Head 5/16-18 x 3/4
48	532 18 11-56	Nut, Speed 5/16-18
49	532 40 76-42	Frame Assembly
50	532 18 80-02	Plate, Frame End
51	532 40 61-09	Shaft, Auger Control
52	532 05 70-79	Washer, Hardened
53	532 01 93-71	Key, Safety
55	812 00 00-02	Ring, Crescent
57	811 05 05-00	Washer, Lock, External Tooth 5/16
58	532 19 85-63	Power Cord

NOTE: All component dimensions given in U.S. inches. 1 inch = 25.4 mm
IMPORTANT: Use only Original Equipment Manufacturer (O.E.M.) replacement parts.
Failure to do so could be hazardous, damage your snow thrower and void your warranty.

SNOW THROWER - MODEL NO. EU9027STE **(96191000304), PRODUCT NO. 961 91 00-03**

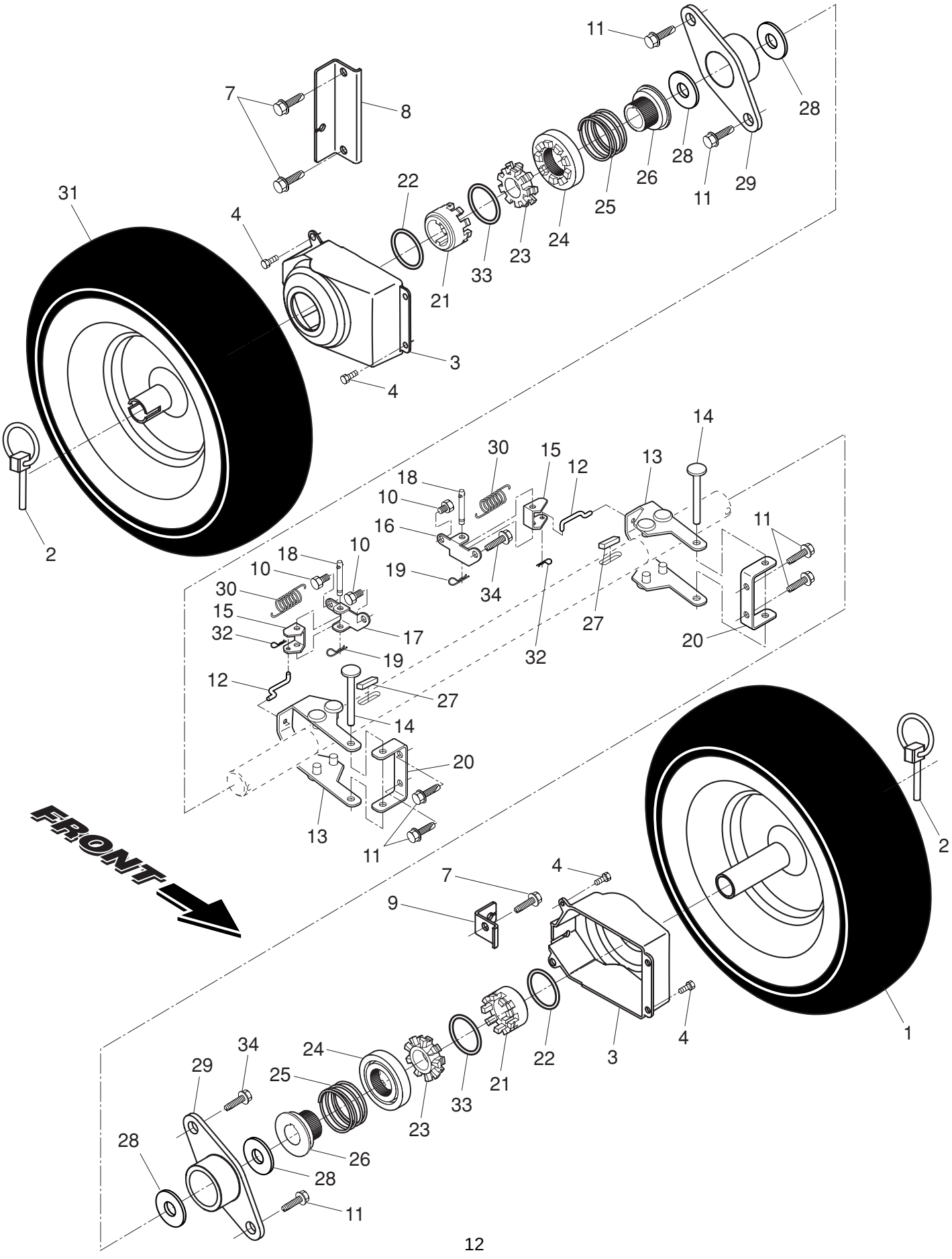

KEY NO.	PART NO.	DESCRIPTION
1	532 19 95-01	Wheel Assembly, 16", Power Steering, LH
2	532 15 54-43	Pin, Klik 1/4
3	532 40 51-61	Cover, Power Steering
4	532 18 44-71	Bolt, Shoulder #10-24 x 5/8
7	817 00 06-16	Capscrew, Hex Head, Flanged 3/8-16 x 1
8	532 18 78-59	Bracket, Steering Cable, RH
9	532 18 78-58	Bracket, Steering Cable, LH
10	817 60 04-06	Screw, Hex Head 1/4-20 x 3/8
11	532 19 85-84	Screw, Hex Head 5/16-18 x 1/2
12	532 40 60-57	Link, Steering Lever
13	532 19 95-19	Yoke, Steering
14	532 18 20-15	Pin, Steering Lever
15	532 19 95-18	Bellcrank
16	532 19 95-12	Bracket Assembly, LH Steering
17	532 19 95-11	Bracket Assembly, RH Steering
18	532 18 18-47	Pin, Steering Bellcrank
19	532 08 51-79	Retainer, Hairpin
20	532 18 41-97	Bracket, Steering
21	532 19 21-26	Driver, Wheel
22	532 18 24-66	Ring, Wire Retainer
23	532 18 76-22	Lobe, Wheel
24	532 19 49-41	Slide, Clutch
25	532 17 91-39	Spring, Clutch Slide
26	532 19 49-40	Lobe, Axle
27	532 18 92-82	Key, Square
28	532 17 46-97	Washer, Thrust (1")
29	532 17 98-30	Bearing, Axle
30	532 19 38-85	Spring, Return
31	532 19 95-02	Wheel Assembly, 16", Power Steering, RH
32	532 70 02-79	Clip, Retainer
33	812 00 00-45	Ring, Retaining
34	532 14 63-15	Screw, Hex Head 5/16-18 x 5/8

NOTE: All component dimensions given in U.S. inches. 1 inch = 25.4 mm
IMPORTANT: Use only Original Equipment Manufacturer (O.E.M.) replacement parts. Failure to do so could be hazardous, damage your snow thrower and void your warranty.

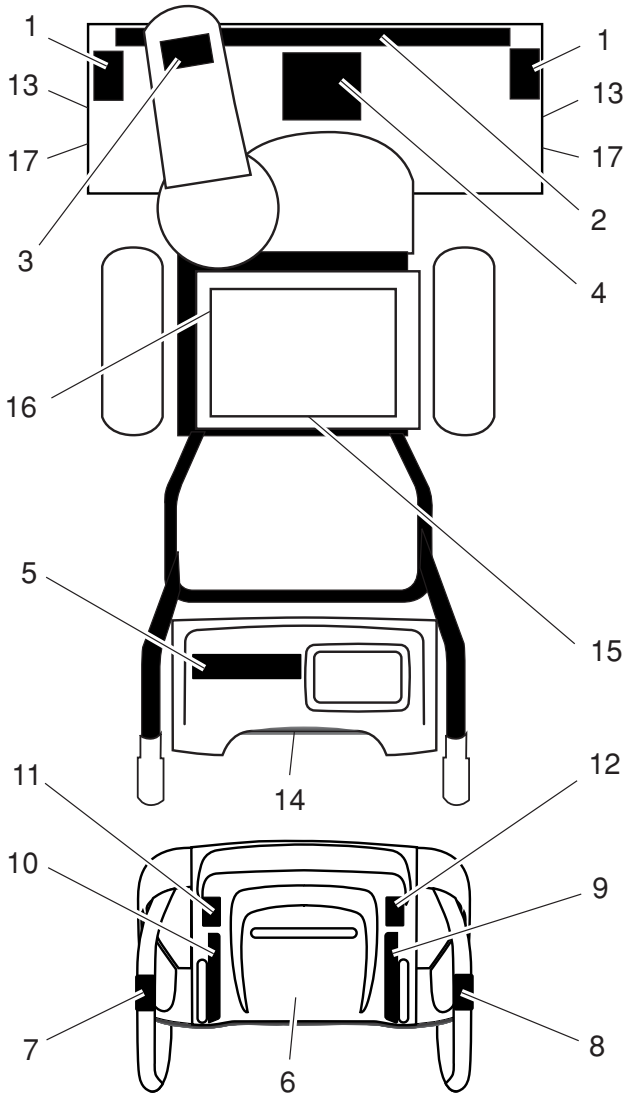
1
13
17
3
1
13
17
2
4
16
5
15
14
11
12
10
9
7
8
6

KEY NO.	PART NO.	DESCRIPTION
1	532 19 96-83	Decal, Danger
2	532 19 21-60	Decal, Husqvarna
3	532 19 96-82	Decal, Danger, Deflector
4	532 18 40-45	Decal, Danger
5	532 18 21-59	Decal, Husqvarna, 9027STE
6	532 18 40-30	Decal, Instruction
7	532 18 40-36	Decal, Traction Lever
8	532 18 40-35	Decal, Auger Lever
9	532 18 40-32	Decal, Speed Control
10	532 18 40-31	Decal, Remote Deflector
11	532 18 39-07	Decal, LH Trigger
12	532 18 39-05	Decal, RH Trigger
13	532 18 41-24	Decal, Height Adjustment
14	532 18 04-33	Decal, Sound Level
15	532 18 40-28	Decal, Belt Guard
16	532 18 40-37	Decal, Fuel Shut-off
17	532 15 57-94	Decal, Husqvarna, Crown
- -	532 40 69-43	Operator’s Manual, European
- -	532 40 69-47	Operator’s Manual, Scandinavian
- -	532 40 69-46	Operator’s Manual, East Bloc

NOTE: All component dimensions given in U.S. inches. 1 inch = 25.4 mm
IMPORTANT: Use only Original Equipment Manufacturer (O.E.M.) replacement parts. Failure to do so could be hazardous, damage your snow thrower and void your warranty.